25CSTHM Carbon Steel Threaded Ball Valve • Spec Sheet

FEATURES & BENEFITS

- Reduced Port
- Two Piece
- 150 lb. WSP
- W.P. 1/4”-1” - 2000 WOG
  1-1/4” - 2” 1500 WOG
- W.T. -4°F - 392°F
- Investment Casting
- Blow-out Proof Stem
- Locking Handle
- Thread Type: ASTM B1.20.1 (NPT)
- Sizes 1/4” - 2”

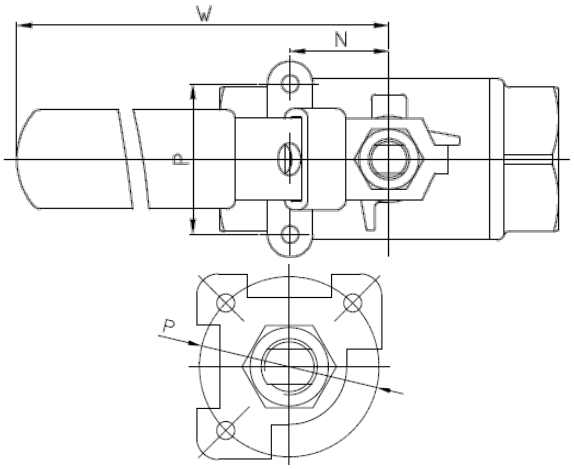

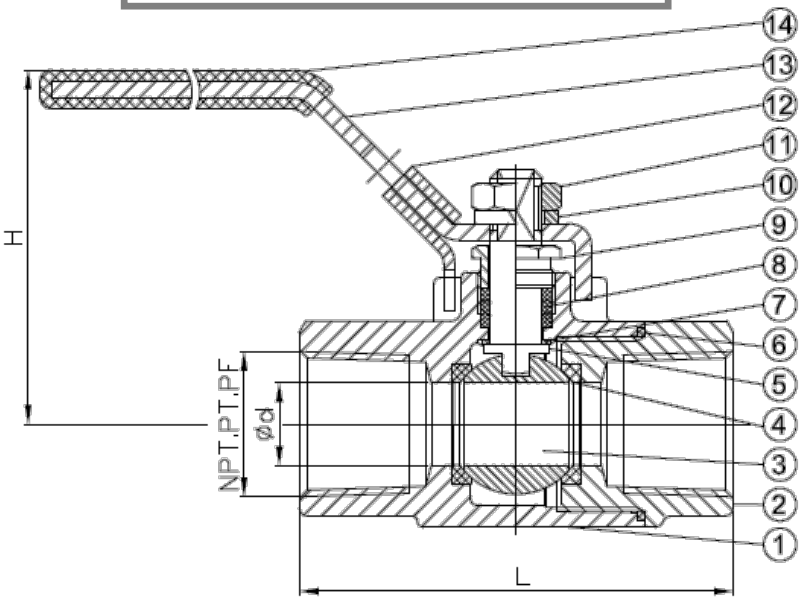

DIMENSIONS

Part #	Size	d	L	H	W	N	P	Torque N.M	Weight (lb)
25CSTH01M	1/4”	0.43	2.27	2.21	4.02	0.49	1.12	6.9	0.73
25CSTH02M	3/8”	0.43	2.27	2.21	4.02	0.49	1.12	9.2	0.66
25CSTH03M	1/2”	0.50	2.36	2.21	4.02	0.49	1.12	12.7	0.68
25CSTH04M	3/4”	0.59	3.11	2.56	4.85	0.91	1.38	16.1	1.17
25CSTH05M	1”	0.79	3.35	2.68	4.85	0.91	1.38	20.7	1.59
25CSTH06M	1-1/4”	0.99	4.10	3.15	6.03	-	Ø1.97	32.2	2.80
25CSTH07M	1-1/2”	1.26	4.33	3.59	6.03	-	Ø1.97	51.8	3.84
25CSTH08M	2”	1.50	5.40	3.86	7.21	-	Ø1.97	59.8	4.67

MATERIAL SPECIFICATIONS

No.	Part	Material
1	Body	Carbon Steel
2	Cap	Carbon Steel
3	Ball	Carbon Steel
4	Seat	R.PTFE
5	Stem	Stainless Steel 316
6	Gasket	R.PTFE
7	Thrust Washer	R.PTFE
8	Packing	R.PTFE
9	Gland	Stainless Steel 304
10	Spring Washer	Stainless Steel 304
11	Stem Nut	Stainless Steel 304
12	Locking Device	Stainless Steel 304
13	Handle	Stainless Steel 304
14	Cover	Plastic

MATCO NORCA

CALIFORNIA 5595 Fresca Dr., La Palma CA 90623 • Phone: 866-532-8306 • Fax: 866-532-8307
TEXAS 1150 Silber Rd., Houston TX 77055 • Phone: 800-935-5456 • Fax: 713-680-2999
ILLINOIS 278 Windy Point Dr., Glendale Heights, IL 60139 • Phone: 844-412-5068 • Fax: 800-640-2252
GEORGIA 113 Industrial Blvd., Americus, Georgia 31709 • Phone: 800-433-7526 • Fax: 800-533-5134
NEW YORK PO Box 27, Rt.22, Brewster NY 10509 • Phone: 800-431-2082 • Fax: 845-278-9056
WEB: **www.matco-norca.com** EMAIL: **mail@matco-norca.com**